Platinum Friction Stays

Manufactured in 304 Austenitic Stainless Steel

Doric

Platinum Friction Stays.indd 1 6/11/2008 3:05:30 PM

Platinum Friction Stays

Manufactured in 304 Austenitic Stainless Steel to ensure corrosion free performance, with solid core spin riveted components for geometrical accuracy.

Features

- Rectangular channel profile for better friction control
- Combination of nylon & stainless steel slider components for smooth and accurate sliding
- Polished Surface for smoother operation and ease of cleaning
- Non handed design to enable ease and flexibility of fitting
- Suitable for Casement and Awning windows

Tested to British & European Standards:

AZUMA Design

Technical Specifications

Bar Thickness:	Channel - 1.0mm Arms - 2.0mm
Bar Width:	Channel - 18.2mm Arms - 16.0mm

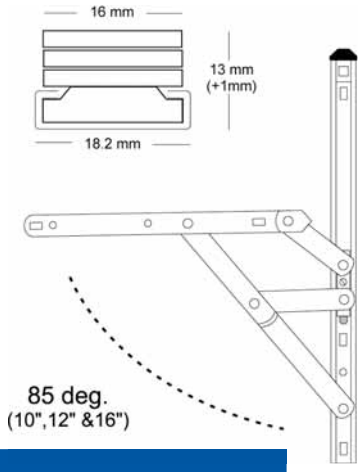

Top Hung

Product Code	Size	Stack Height (+ 1mm)	Max. Vent Width	Max. Vent Height	Max. Weight	Opening
PS-8	8"	13 mm	1200 mm	300 mm	10 kg	60 deg.
PS-10	10"	13 mm	1200 mm	400 mm	16 kg	85 deg.
PS-12	12"	13 mm	1200 mm	500 mm	21 kg	85 deg.
PS-16	16"	13 mm	1200 mm	700 mm	22 kg	85 deg.
PS-20	20"	13 mm	1200 mm	900 mm	25 kg	40 deg.
PS-24	24"	13 mm	1200 mm	1200 mm	30 kg	40 deg.

Side Hung

Product Code	Size	Stack Height (+ 1mm)	Max. Vent Width	Max. Vent Height	Max. Weight	Opening
PS-8	8"	13 mm	400 mm	1200 mm	9 kg	60 deg.
PS-10	10"	13 mm	500 mm	1200 mm	12 kg	85 deg.
PS-12	12"	13 mm	600 mm	1200 mm	15 kg	85 deg.
PS-16	16"	13 mm	700 mm	1200 mm	18 kg	85 deg.
PS-20	20"	13 mm	Refer to manufacturer			
PS-24	24"	13 mm	Refer to manufacturer			

The above is intended as a guide, please contact manufacturer for specific application. Regular maintenance is required on stays fitted in coastal, high humidity and corrosive environments for optimum operation. Doric has a policy of continual product improvement, as such we reserve the right to change specifications without notice.

For top hung windows over 1000mm in height, the opening must be restricted to a maximum of 200mm projection. We recommend Doric Restrictor Arms to be fitted.

Head Office: Phone + 61 (0) 2 9609 2555 sales@doric.com.au
Fax: + 61 (0) 2 9604 2910 www.doric.com.au

Doric